Optimization of Tapered Laminates with Ply Drops

Dr. Giuliano Allegri

Content

1) Ply drop-offs: a necessary evil?

2) Damage Initiation at ply drop-offs: a fracture mechanics perspective

3) Optimization of ply drop sequences

Ply drop-offs: a necessary evil?

- Dropping off plies allows changing laminate thickness and composition
- Ply drops represent an abrupt change in the geometric/mechanical properties of the laminate, so they behave as stress raisers and delamination initiators

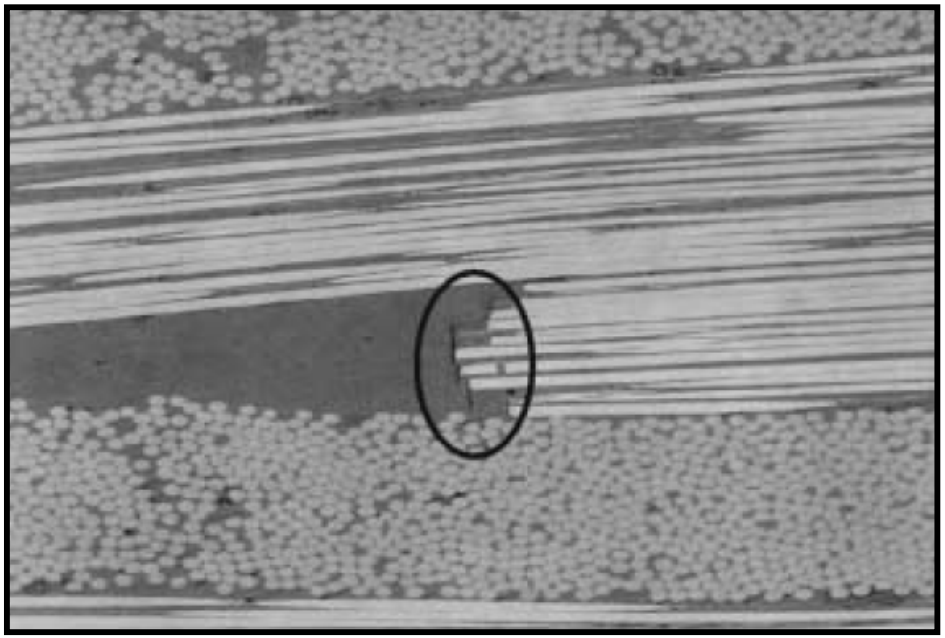

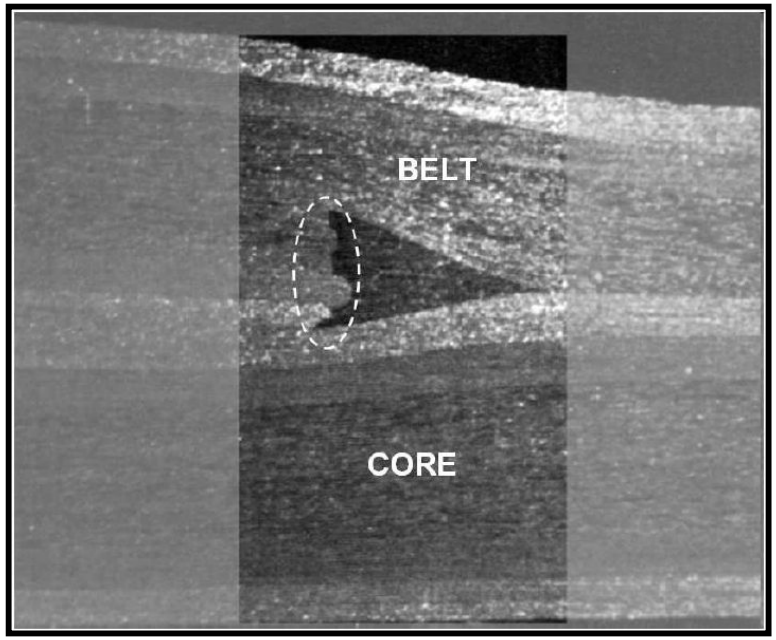

Damage Initiation @ Ply Drop-offs

- A fracture mechanics perspective

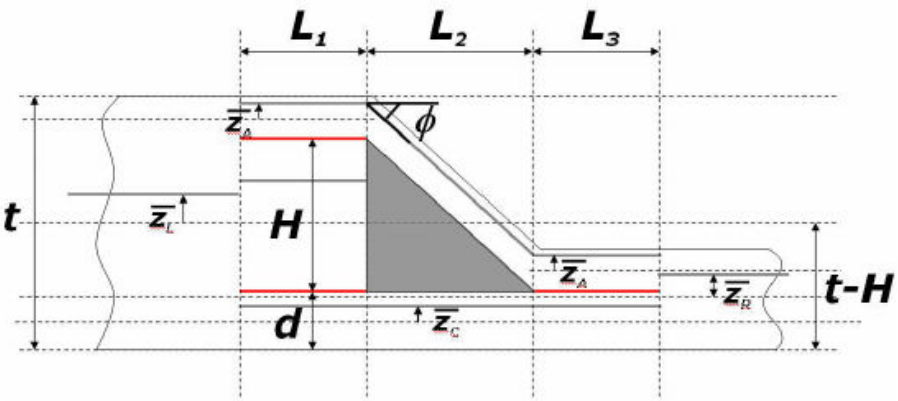

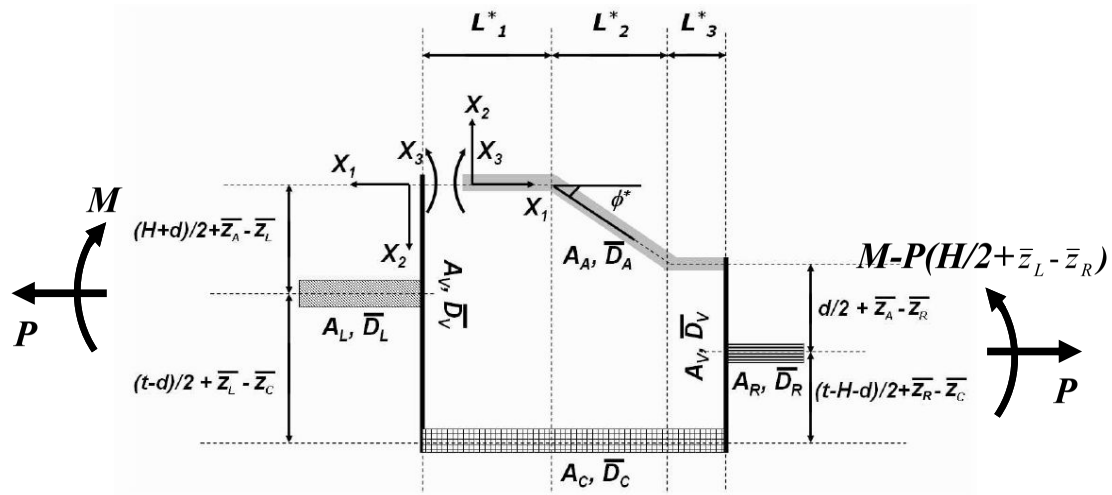

- Delaminations emanate from the resin pocket tip; if the latter is considered as a void, initiation loads can be derived from fracture mechanics considerations when L_1, $L_3 \rightarrow 0$
- The strain energy release rates (SERR) expressions are computed employing beam theory and orthotropic rescaling

SERR Formulas: limitations

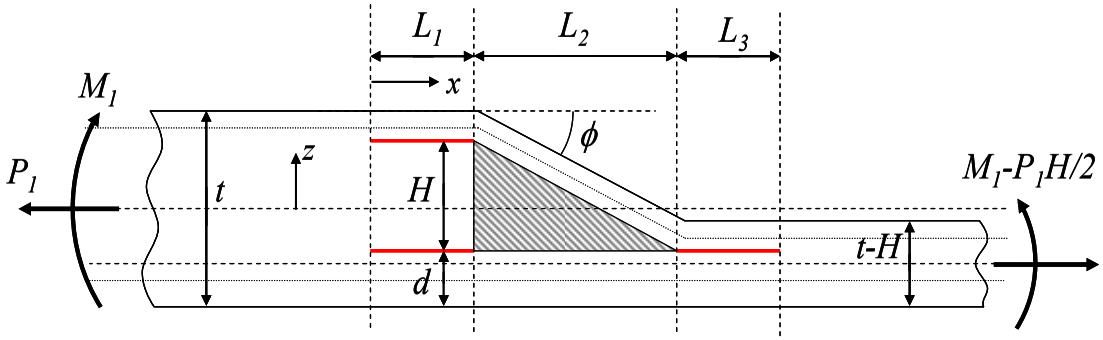

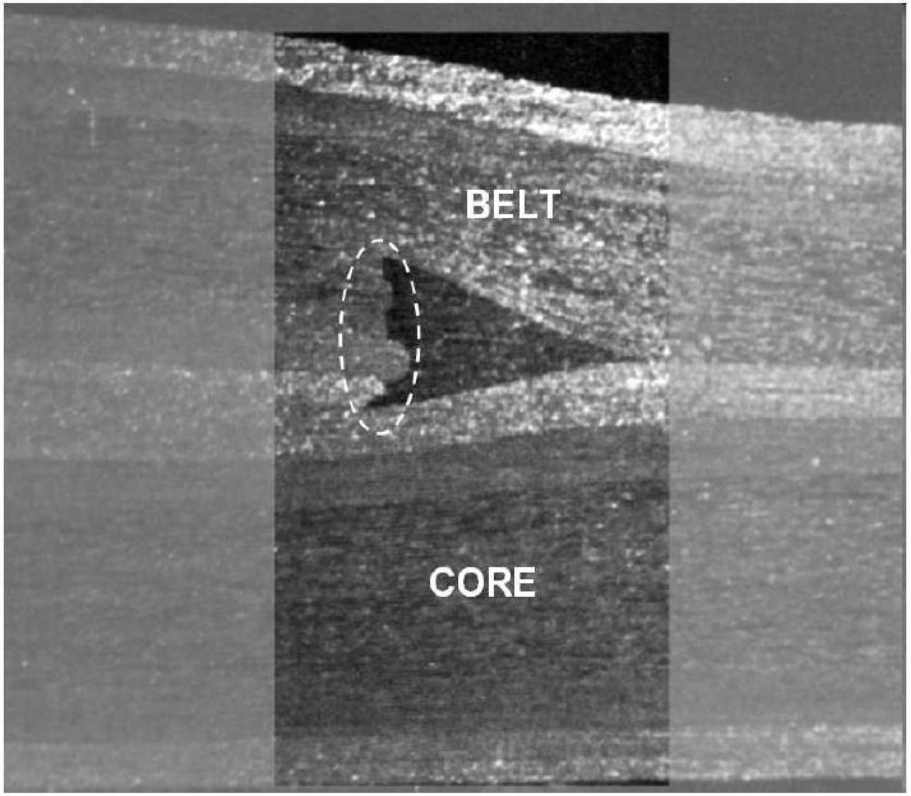

Geometric idealization – limitations:

1. resin pockets are not exactly right triangles;
2. the curvatures of the fibres surrounding the resin pocket are much smoother then assumed
3. the thickness of the belt and core sub-laminates is not constant

All the assumptions above lead to <u>conservative estimations</u> of the strain energy release rates (SERR) for delaminations emanating from the resin pocket tips

Topological Optimization

Actual

Idealized

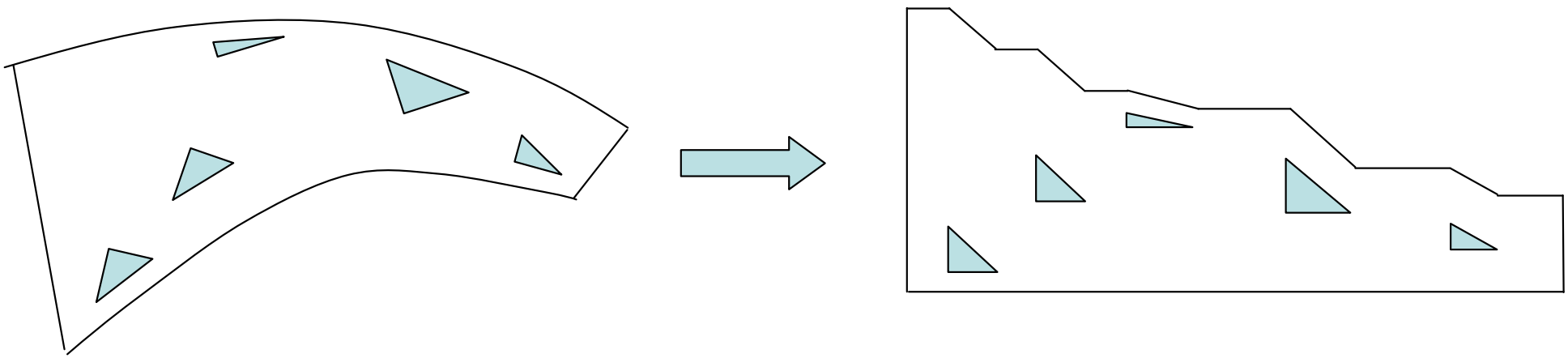

An arbitrary laminate configuration comprising ply drop-offs is idealized as a sequence of asymmetrically tapered units

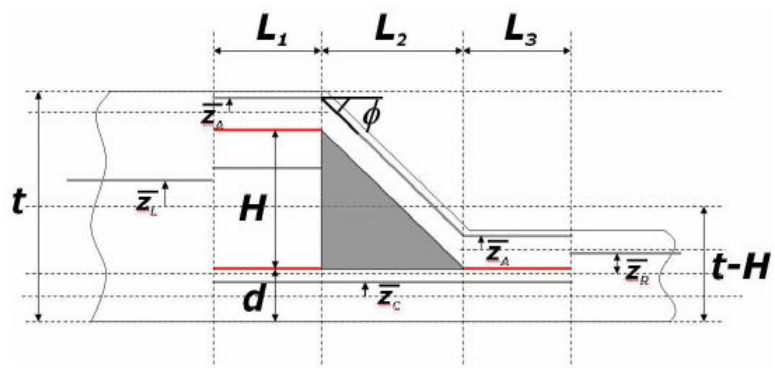

Topological Optimization Tool

- <u>Two stage optimization tool</u>

  1) Deterministic first stage: find which plies have to be terminated in order to match the thick section laminate with the thin section one

  2) Stochastic second stage: find the optimal ply drop-off sequence via the minimization of the maximum SERR failure index associated with the ply terminations, e.g.

$$FI = \frac{G_I}{G_{Ic}} + \frac{G_{II}}{G_{IIc}}$$

Step 2) is based on simulated annealing with stochastic tunnelling

Guidelines in the literature

- Practical "rules of thumb" for designing tapered laminates:

  1) always try to drop the innermost block in order to match the laminate thick and thin sections;

  2) drop 0° plies close to the thick section, ±45° in the middle sections and 90° plies close to the thin end;

  3) in pure bending cases start dropping the innermost plies of the innermost block;

  4) in pure axial force cases start dropping the outermost plies of the innermost block

  5) promote interleaving by avoiding dropping adjacent plies

  6) if interleaving is not possible, try to maximise the distance between the adjacent ply terminations

These rules are embedded in a Fuzzy Logic Optimization/Analysis Tool called "ALTO" (poster)

A Simple Case Study

- Simply symmetrical tapered laminate

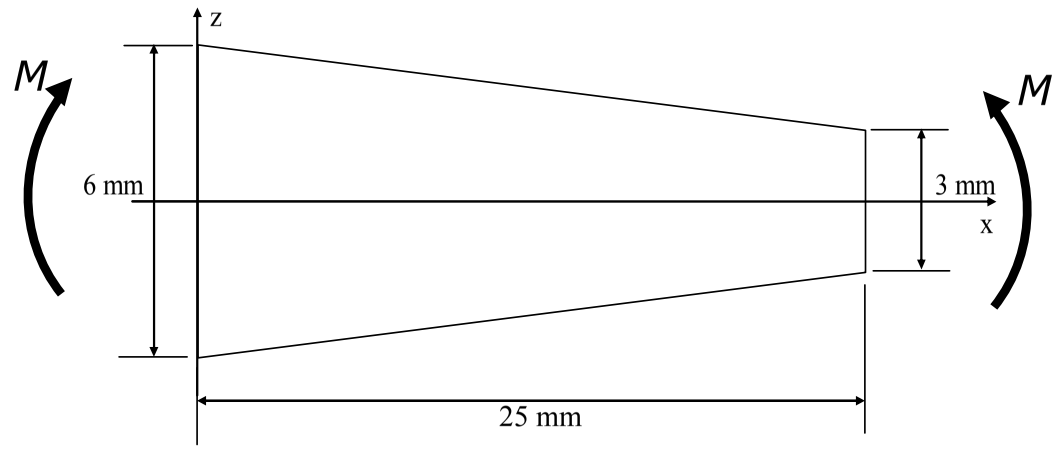

Thick Section Stacking Sequence:

$[0°/0°/+45°/90°/90°/-45°/0°/0°]_{3S}$

Thin Section Stacking Sequence:

$[0°/0°/+45°/-45°/\ 0°/+45°/-45°/\ 0°/+45°/-45°/\ 0°]_S$

Material properties:
T300/914C

$$E_1 = 142.4\,GPa \quad E_2 = E_3 = 8.7\,GPa$$
$$G_{12} = G_{13} = 4.6\,GPa \quad G_{23} = 3.8\,GPa$$
$$\nu_{12} = \nu_{13} = \nu_{23} = 0.3$$
$$G_{Ic} = 0.36\,N/mm \quad G_{IIc} = 0.9\,N/mm$$

Configurations for a Pure Bending Load

- Simple In-Out Terminations (A)
- Literature Guidelines (B)
- Optimization Algorithm (C)

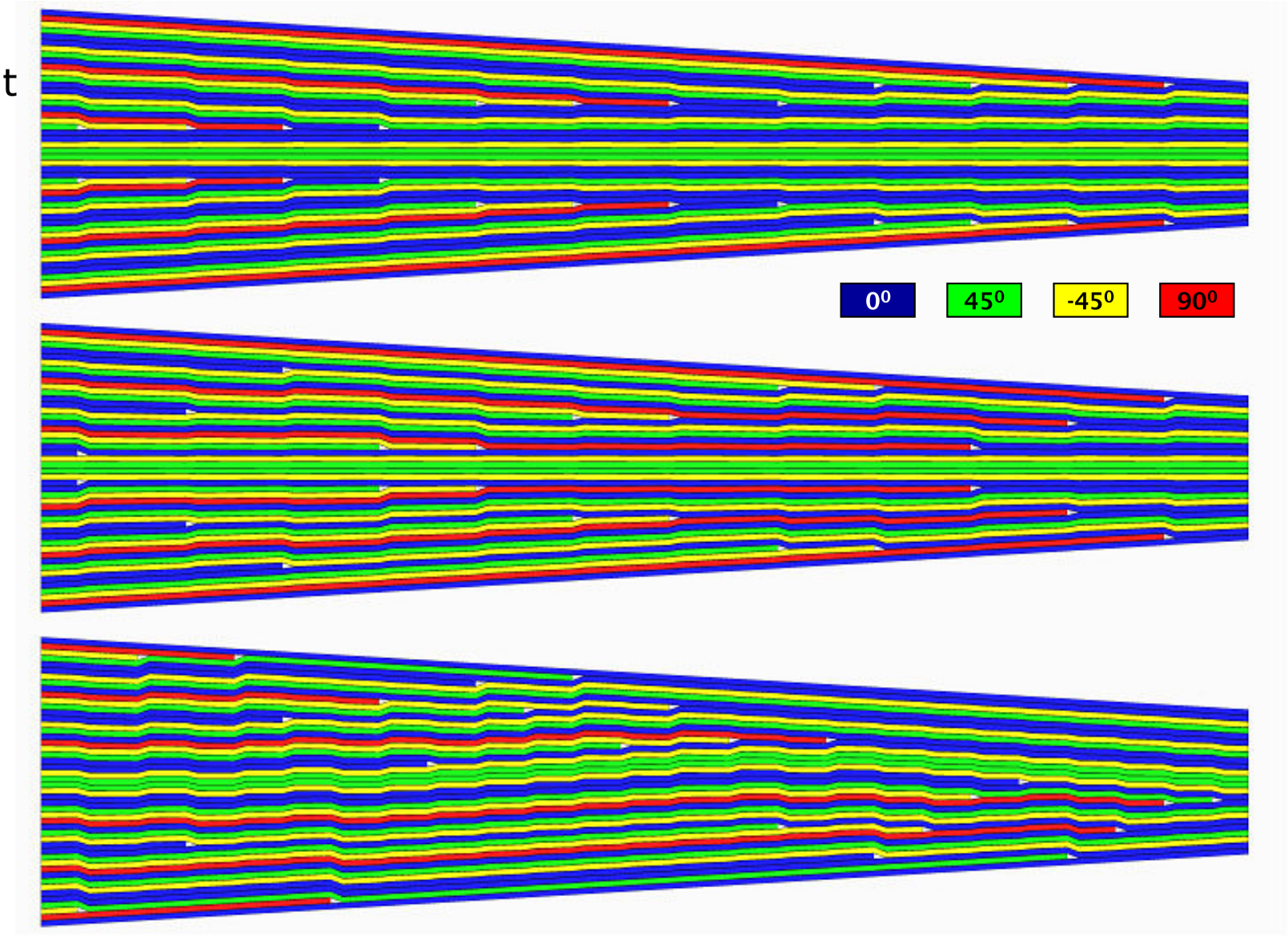

LS-DYNA FE models

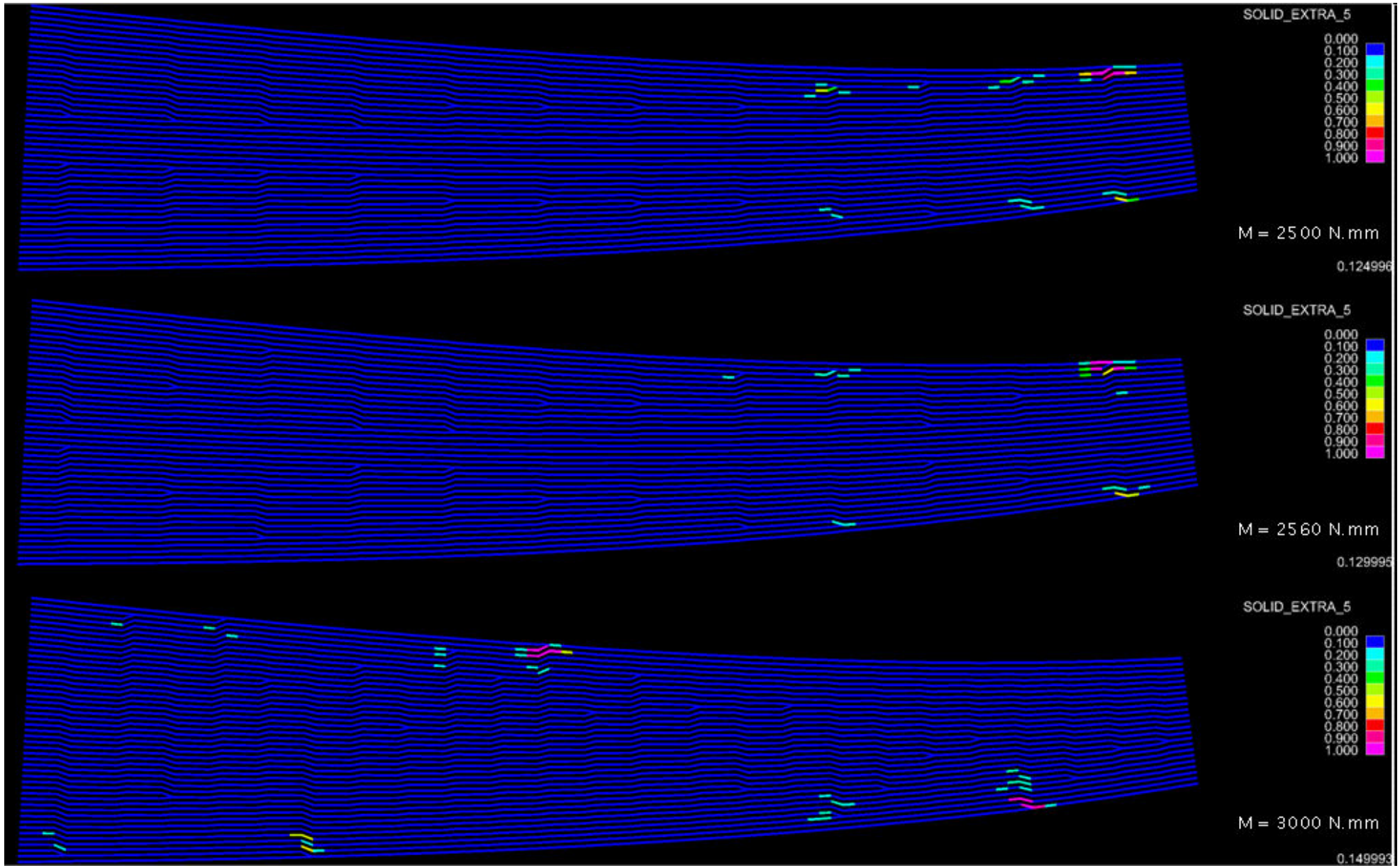

LS-DYNA FE models

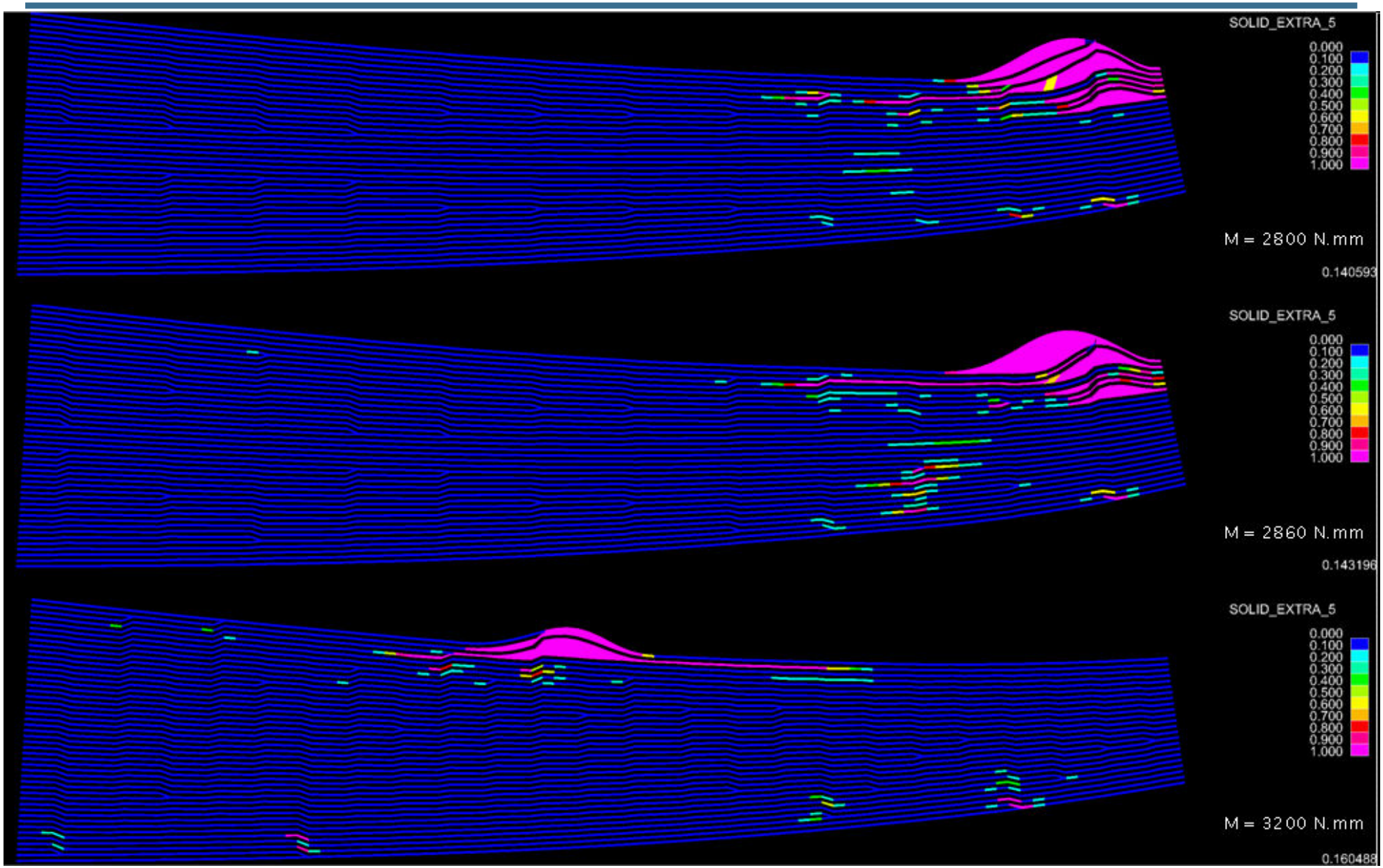

Comparisons

Configuration	LS-DYNA (N)	Analytical (N)
(A)	2500	1995 (-20.2 %)
(B)	2560	1995 (-22.1%)
(C)	3000	3270 (+9%)

Delamination initiation load from the FE model and the analytical solution

- Simple in-out dropping and literature guidelines give similar results

- The optimization tool presented here produces the best results, but resulting laminate is not symmetric

- The analytical solution provides a reasonable estimate of the failure loads when compared to high fidelity FEM tools

Summary & Conclusions

- Analytical expressions for the SERR associated with delaminations emanating from ply drop-offs locations have been worked out and validated against FE analysis.
- Realistic ply drop-off configurations have been considered, with the aim at obtaining conservative estimates for the SERR.
- Since the resin pockets present at the termination location are considered as voids, it is possible to predict the delamination initiation using the SERR values for zero debond lengths.
- A two step optimization algorithm has been developed for matching the thick and thin sections of tapered laminates; this procedure allows identifying which plies to drop and where (in a topological sense)
- The optimization procedure has been validated by means of virtual testing

Acknowledgements to Rolls-Royce Plc for their support of this research